PLP-C2090T-N

Intel® Processor N50 9" Panel PC





Specifications

LCD Display	Type	WSVGA TFT-LCD
	Size	9"
	Resolution (Pixel)	1024 x 600
	Brightness	300 cd/m2
	Backlight life	20,000 hours
	Touch Screen Type	Analog Resistive (**Standard**) / **Projected Capacitive Touch Panel** (**Option**)
Processor		Intel® Alder Lake N50 Processor (Dual core & up to 3.40GHz)
System RAM		8GB / 16GB DDR5 Memory
BIOS		AMI BIOS
Expansion		M.2 E-key (2230) USB2.0/PCIe Gen.3 *1 interface (CNVi Supported)
Ethernet		Intel® i226-V 2.5GbE x1
Audio		HD Audio, Realtak ALC897
Disk Support		M.2 M-key (2242) PCIe Gen.3 /SATA interface support NVME
Serial Ports		COM port (RS232/485/422)
USB Ports		USB3.2 Gen.1 x2
Power Requirement		+12V ~ +36VDC power input by terminal block
Operating Temperature		0˚C to +60˚C
Storage Temperature		-30˚C to + 80˚C
Dimentsion (W x H x D) mm		236.6 x 146 x 35
OS Support		Windows 11 (64-bit), Windows 10 (64-bit), Linux
Certificate		CE, UKCA, FCC, VCCI, Shock, Vibration, IP65 (Front Panel)

Ordering Information

Part Number	Description
PLP-C2090T-N8	PLP-C2090T Series with Intel®Alder Lake N50 Processor, 8GB DDR5, Resistive Touch and DC12~36V Power input
PLP-C2090T-N16	PLP-C2090T Series with Intel® Alder Lake N50 Processor, 16GB DDR5, Resistive Touch and DC12~36V Power input
PLP-C2090T-PN8	PLP-C2090T Series with Intel® Alder Lake N50 Processor, 8GB DDR5, **PCAP** Touch and DC12~36V Power input
PLP-C2090T-PN16	PLP-C2090T Series with Intel® Alder Lake N50 Processor, 16GB DDR5, **PCAP** Touch and DC12~36V Power input
WLAN KIT **(Option)**	M.2 E-Key JWW6051 802.11ac/a/b/g/n Module, with wireless Antenna and cable

* All information contained in this document is subject to change without prior notice. Please log on www.antcomputer.com to acquire latest information. For detail mechanics drawing, please contact our sales.

Dimension

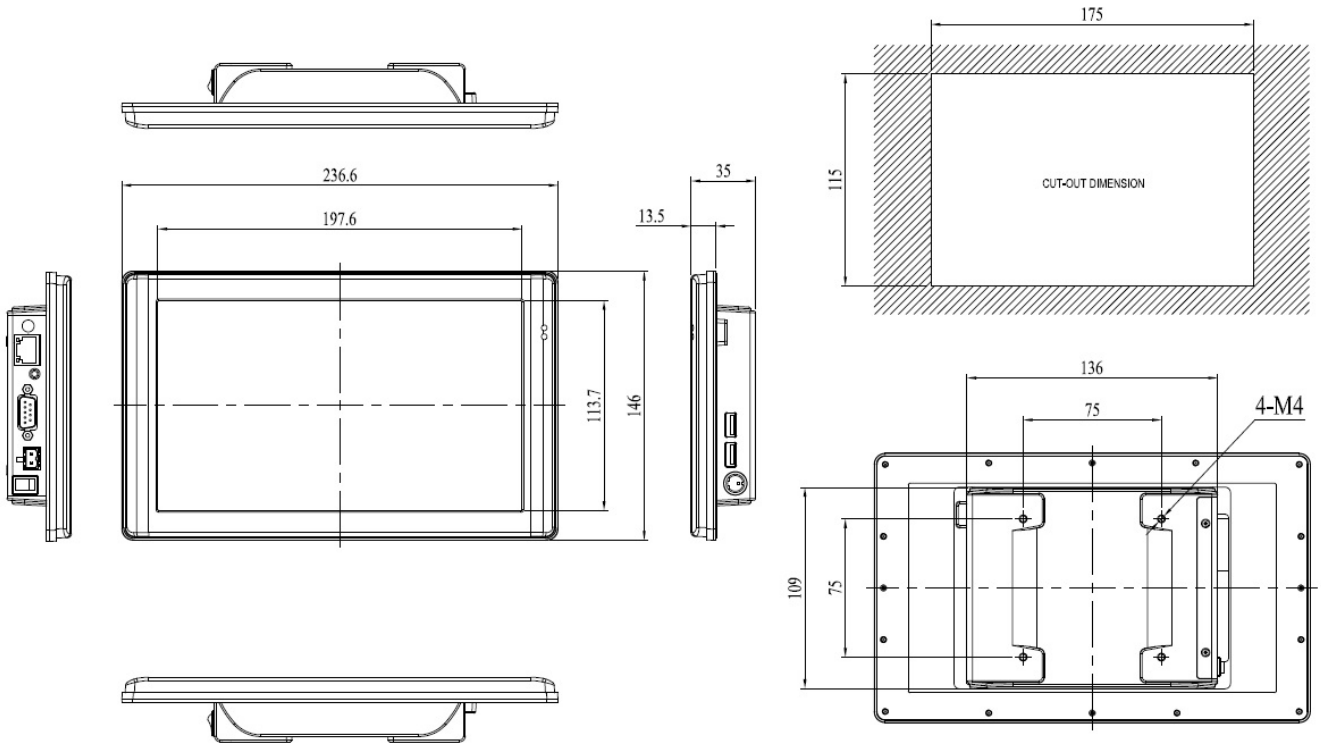

Overview

Right Side

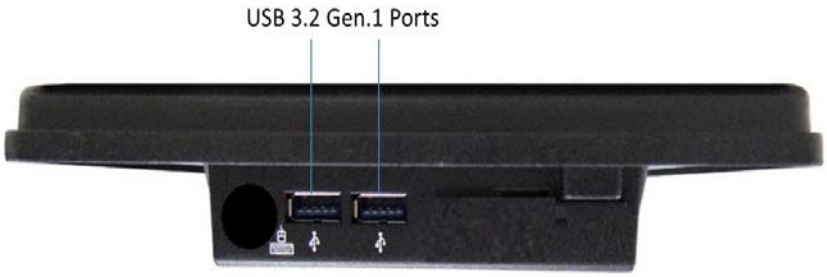

Left Side

